EB166
568667

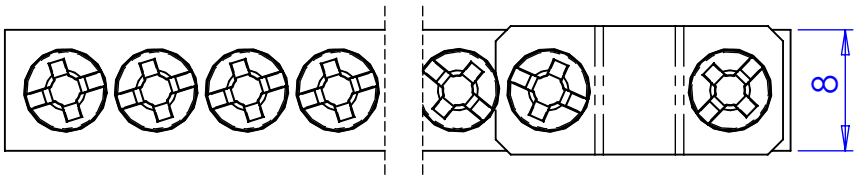

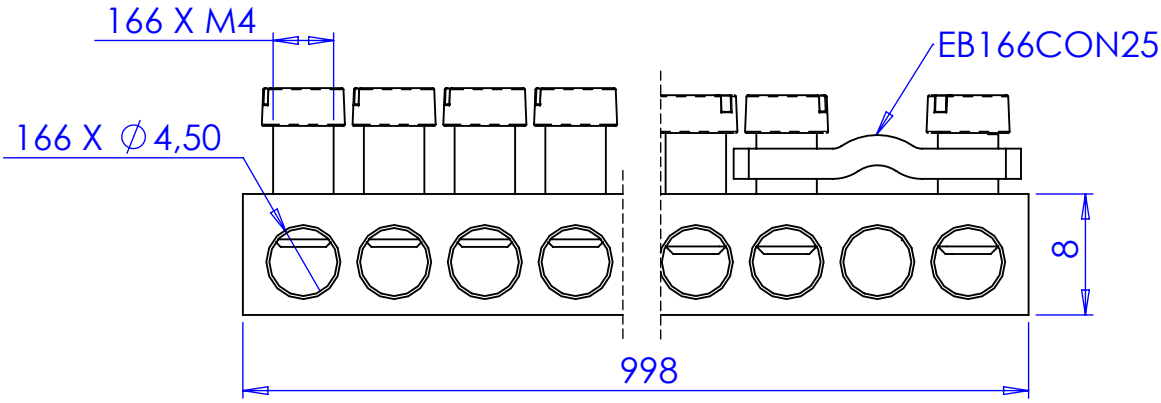

#	Conductor	Size	Ø	↻	Strip Lenght min.
166		1,5 - 10mm²	4,5mm	1,2 Nm	8mm
		1,5 - 10mm²	4,5mm	1,2 Nm	8mm
Optional		6 - 25mm²		1,2 Nm	8mm

Optionals parts

EB166CON25
568671

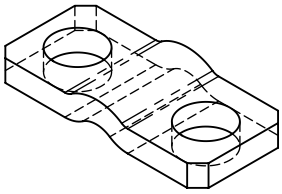

EB142-166SUP2
568670

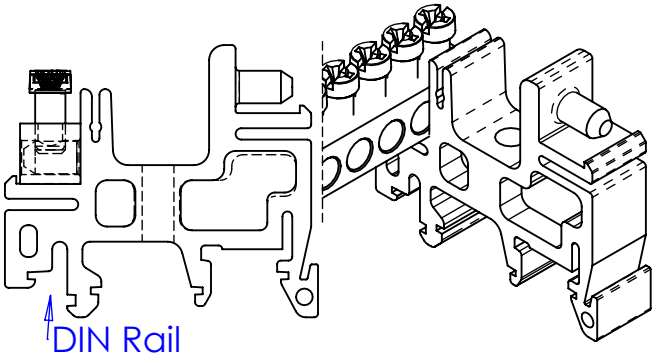

EB142-166SUP1
568669

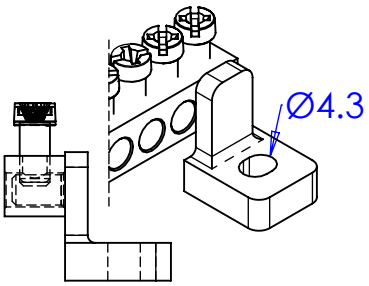

WARNING:
1. Pentair products shall be installed and used only as indicated in Pentair product instruction sheets and training materials. Instruction sheets are available at www.erico.pentair.com and from your Pentair customer service representative.
2. Pentair products must never be used for a purpose other than the purpose for which they were designed or in a manner that exceeds specified load ratings.
3. All instructions must be completely followed to ensure proper and safe installation and performance.
4. Improper installation, misuse, misapplication or other failure to completely follow Pentair's instructions and warnings may cause product malfunction, property damage, serious bodily injury and/or death, and void your warranty.

SAFETY INSTRUCTIONS:
All governing codes and regulations and those required by the job site must be observed.
Always use appropriate safety equipment such as eye protection, hard hat, and gloves as appropriate to the application.

Pentair, CADDY, ERICO CADWELD, ERICO CRITEC, ERICO, ERIFLEX, and LENTON are owned by Pentair or its global affiliates. All other trademarks are the property of their respective owners. Pentair reserves the right to change specifications without prior notice.

 ©2017 Pentair All Rights Reserved