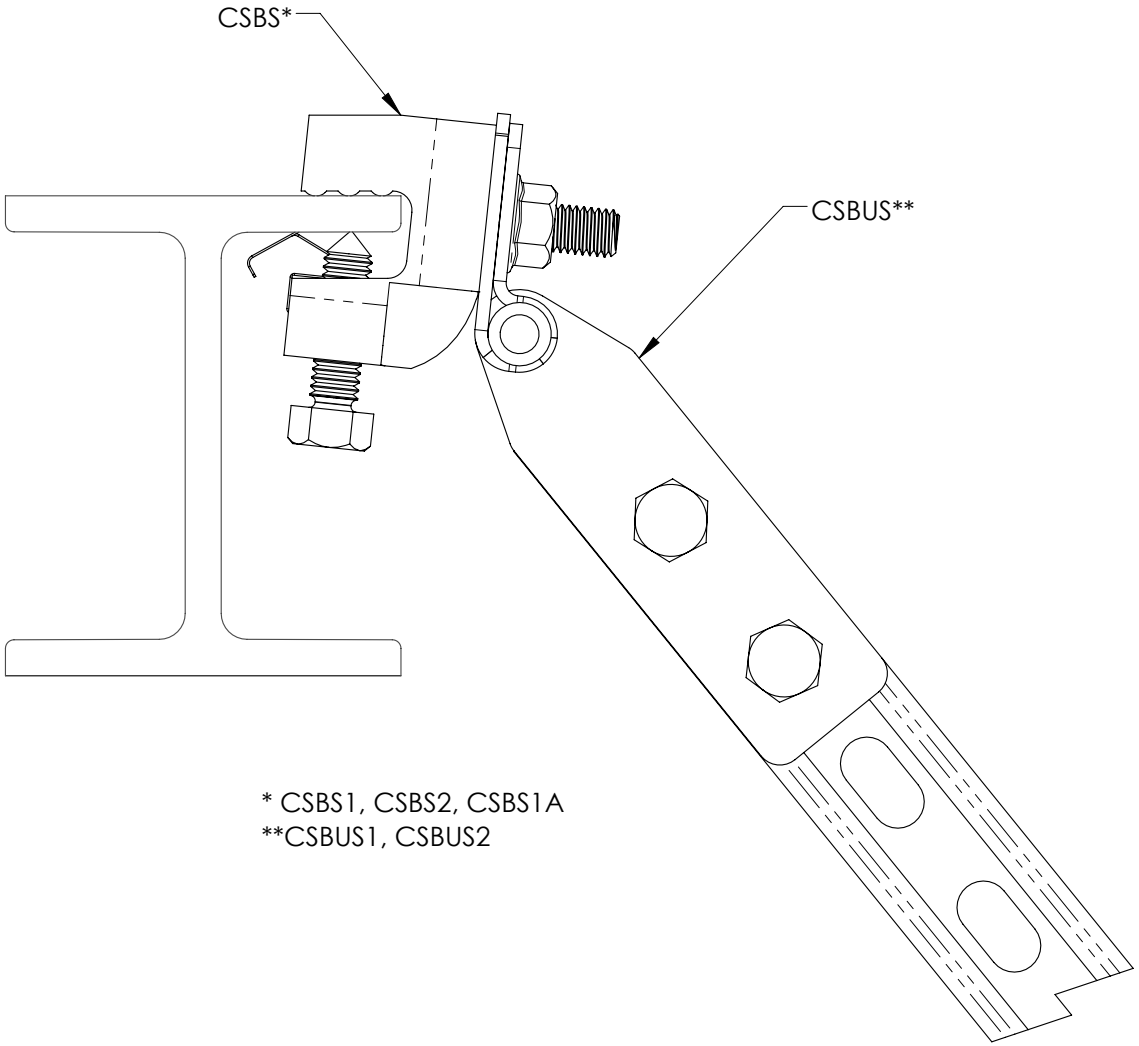

* CSBS1, CSBS2, CSBS1A
**CSBUS1, CSBUS2